MICROWELL

User´s and installation manual

SWIMMING POOL DEHUMIDIFIER

Model: **DRY 500 DUCT**

DRY 800 DUCT

DRY 1200 DUCT

Version: 2015-09-21

Thank you for purchasing Microwell swimming pool dehumidifier. You have exceptional piece of device and you chose the best and the most energy efficient dehumidifier for your pool. Before you use this device, it is necessary to carefully read the entire User's manual. Please keep the User's manual available in the case of any future reference is required. Please provide this information also to each user of the device. Please mind local regulations in your country regarding installation and usage of this dehumidifier which are valid in addition to this User's manual.

CONTENT

1. WASTE DISPOSAL INFORMATION 3

2. SAFETY MEASURES 3

2.1 ELECTRICAL SAFETY 3
2.2 USAGE PRECAUTIONS 4
2.3 HANDLING PRECAUTIONS 4

3. UNIT DESCRIPTION 5

4. INSTRUCTIONS FOR USE 6

4.1 HUMIDISTAT 6
4.2 CONTROL OF THE FAN 8
4.3 COMPRESSOR CONTROL 8
4.4 MAINTENANCE 8

5. INSTALLATION GUIDE 9

5.1 LOCATION OF THE EQUIPMENT 9
5.2 MOUNTING OF THE UNIT 9
5.3 COMPRESSOR TRANSPORT PROTECTION 10
5.4 DRAINAGE OF CONDENSATE WATER 11
5.5 CONNECTION OF POWER SUPPLY 11
5.6 LPHW HEATING COIL FOR ADDITIONAL HEATING – ON DEMAND 12
5.7 HOT GAS DEFROST (DRY500DUCT) – ON DEMAND 13

6. TECHNICAL DATA 14

6.1 TECHNICAL DATA TABLE * 14
6.2 EXTRACTION RATE DIAGRAMS 15
6.3 UNIT´S DIMENSIONS 16
6.4 WIRING DIAGRAMS 17

7. SUMMER SHUT-DOWN 25

8. WARRANTY 25

1. WASTE DISPOSAL INFORMATION

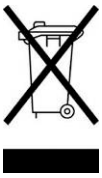

When using this dehumidifier in the European countries, the following information must be followed:

DISPOSAL: Do not dispose this product as unsorted municipal waste. It is prohibited to dispose this dehumidifier in domestic / household waste. It is prohibited to dispose this appliance into forests or natural landscape. This could lead into local soil pollution. Collection of such waste must be treated individually.

DISPOSAL POSSIBILITIES:

1. The municipality has established a collection system where electronic waste can be disposed.
2. When buying a new product, the retailer or the manufacturer may take back the old appliance free of charge.
3. As old appliance may contain valuable resources which could be sold to scrap material dealers.
4. Disposal of packaging materials such as carton box or plastic / bubble foil can be recycled.

2. SAFETY MEASURES

This device is primarily designed for use in indoor swimming pool, sauna or spa. Alternative use is in laundries, drying rooms or other humid areas requiring dehumidification.

Model Microwell **DRY 500 DUCT** is designed for halls with swimming pool surface of up to 50m^2.
Model Microwell **DRY 800 DUCT** is designed for halls with swimming pool surface of up to 80m^2.
Model Microwell **DRY 1200 DUCT** is designed for halls with swimming pool surface of up to 110m^2.

For proper and optimal operations of the device is it necessary to maintain the air temperature in the swimming pool room / hall 2-3°C higher than actual water temperature in the pool. It is also necessary to keep the air temperature in the swimming pool room / hall in operational temperature range of the dehumidifier (specified in Technical data section) based on particular choice of Operational Temperature Accessories chosen for your particular device. Lower air temperature than operational temperature range may cause damage to the unit resulting from freezing. Higher temperatures than operational temperature range may cause damage to the unit resulting from overheating of the unit.

It is necessary to follow instructions in this User's manual and local regulations in your country that regulate the installation and usage of this device. Incorrect, improper or operations contradictory to this User's manual may lead to an injury or property damage and will lead to loss of warranty. To prevent injury or property damage the following instructions must be followed:

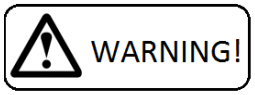

2.1 ELECTRICAL SAFETY

- *The device operates at dangerous electrical current.*
- *Only authorized person with particular electro-technical qualification can manipulate with unit.*
- *Danger of electrical shock.*

- *Do not exceed the required power supply.*
- *Do not turn the device on that shows signs of possible damage such as broken packaging, broken or otherwise damaged unit's chassis or cover, smoke, smell, etc.*
- *It is necessary to use appropriate Residual current circuit breaker (RCD) for connection of the dehumidifier to main power supply.*
- *Do not manipulate with the device with wet hands.*
- *Do not clean the device with water.*
- *Before cleaning the device, switch off the circuit breaker of the unit's power supply.*
- *Installation, service or repair must be performed by qualified technician.*
- *When the device is not intended to be used for a longer time, we recommend switching the circuit breaker of the unit's power supply off.*
- *Unit must be installed in vertical position to avoid condensate water to enter electrical part of the unit.*
- *It is forbidden to install the unit close to devices that may cause electrical or frequency disturbance such as welding machines, motors or rotors, WIFI/WLAN routers or repeaters.*
- *It is forbidden to alter electrical installation of the device. It is also forbidden to alter any other part or functionality of the device.*

WARNING!

2.2 USAGE PRECAUTIONS

- *Air outlet (exhaust) and air inlet (intake) are designed for connection to air ducting system.*
- *Do not cover or block the intake or exhaust openings. It is forbidden to block or cover the intake or exhaust openings with clothes, towels, buckets, canoes, ceiling beams, etc.*
- ***Do not install or place any heating appliances close to intake grilles / louvers. It could continually overheat the dehumidifier and result in its malfunction or damage.***
- *Do not climb up on or sit on the unit.*
- *Do not place any objects on the top of the unit (e.g. boxes, flower vases, etc.).*
- *Do not spray any flammable substances into the equipment; this might lead to fire.*
- *Do not clean the equipment with aggressive cleaning agents, this might lead to damage or deformations.*
- *When cleaning plastic parts do not use any cleaning agents unsuitable for the cover of the dehumidifier (household cleaning agents, solvents, bleaching agents, benzene, diluents, rough cleaning powder, cresol, chemical agents). Instead, sweep the dehumidifier cover with a soft cloth or a sponge.*
- *Never throw or insert any objects into any hose or opening.*
- *The cover is made from powder coated metal. Do not manipulate with lighted cigarette, cigarette ashes, or any other kind of fire in vicinity to this part.*
- *Use this device exclusively for the intended purpose, as described in the attached instruction manual. Do not use parts which are not recommended.*
- *Do not drink or use the condensate water drained from the unit. Do not return the water back to the swimming pool. The water may be contaminated with bacteria.*
- *Children are not allowed to operate, touch or play with the unit.*
- ***Children are not allowed to manipulate with packaging, plastic / bubble foil. Risk of suffocation!***
- ***Prevent the children from injury or harm caused by any manipulation with the unit, its parts or its packaging. Small parts like screws may be swallowed and cause suffocation or harm to health.***
- *Do not leave the children in the swimming pool hall unattended.*

WARNING!

2.3 HANDLING PRECAUTIONS

- *Leave the unit in vertical upright position for at least 2 hours before the installation.*
- *Transport in lying position or turning the device over may harm the compressor and will lead to loss of warranty.*
- *The device must be handled with care and special attention avoiding any mechanical damage.*
- *It is forbidden to apply any improper mechanical force onto the unit. This may cause mechanical damage to the device.*
- *It is forbidden to let the device fall freely onto the ground or any solid surface resulting in hard impact.*

- *Please notify your reseller or distributor if you suspect that the unit was delivered damaged. Unit may seem to work well at start but small damage can make the unit go out-of-order in short time. In such case the unit must be inspected and approved for further use by your reseller.*
- *Please notify your reseller or distributor if directly after installation you suspect that unit is not working in perfect order.*
- *In the case of device failure resulting from improper handling or mechanical damage (impact, hit, fall, etc.), the manufacturer reserves the right to evaluate the continuity of warranty.*

3. UNIT DESCRIPTION

The unit was delivered in carton box on a wooden palette. Please unpack the unit and check the content. It should include the following:

1. The dehumidifier
2. Wall console with fixation screws and dowels (**DRY 500 DUCT**), Floor feet (**DRY 800/1200 DUCT**) or Wall console with fixation screws and dowels (**DRY 800/1200 DUCT**)
3. User's manual
4. Condensate drain hose
5. Installation layout (**DRY 500 DUCT**)

Additional accessories to be included in the box (on demand):

1. Remote Wireless regulator DRY EASY 300
2. Remote Wired regulator EBERLE
3. Solenoid valve

Additional accessories to be included in separate box (on demand):

1. Mobile stand
2. Through-the-wall adapter set

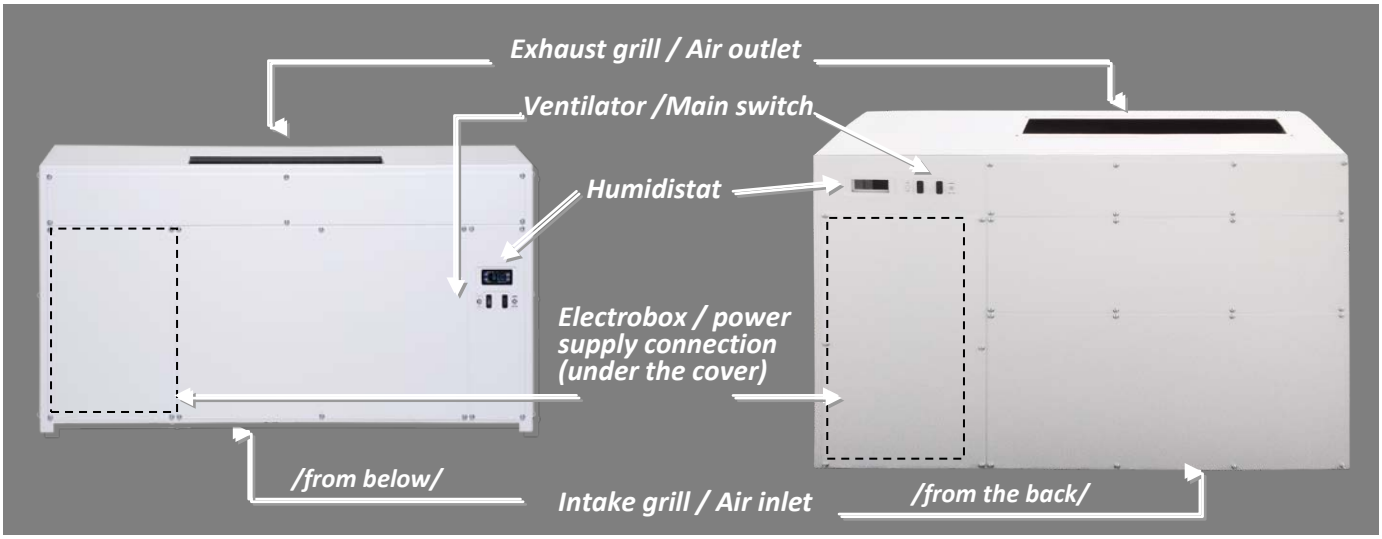

Dimensions of air ducting connections

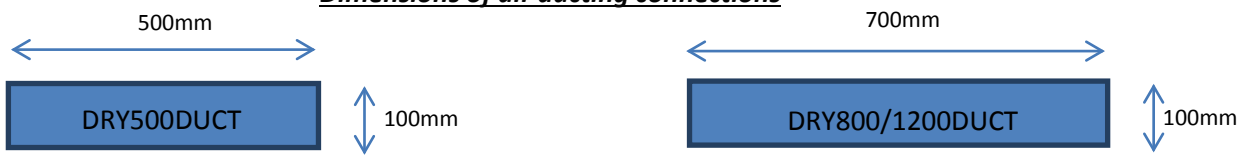

Humid air is brought into the dehumidifier. It leaves the dehumidifier dried and warmer by 5-20° than inlet air depending on air temperature, humidity and LPHW performance.

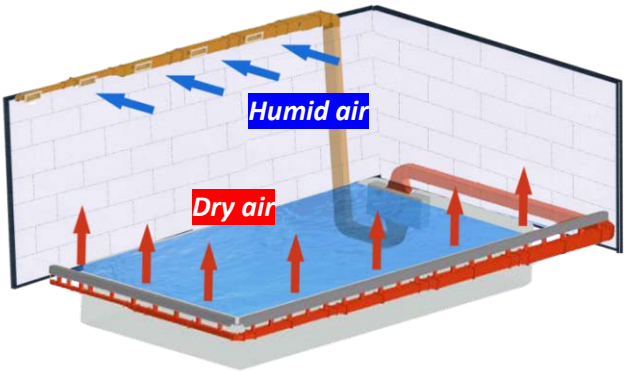

RECOMMENDATION: ***Cover your pool when not used. It will reduce the amount of vapor in the air and energy costs needed to operate your dehumidifier.***

4. INSTRUCTIONS FOR USE

4.1 Humidistat

Your unit is equipped with built-in mechanical humidistat by standard and built-in digital humidistat and thermostat by standard. On demand it can be equipped with remote wireless or wired regulator. Regulation by remote regulators is described in their separate manuals coming with the regulators.

The built-in mechanical humidistat is located at the bottom of the unit on the left (**DRY 500 DUCT**) or underneath the electrobox (**DRY 800/1200 DUCT**), both under the dehumidifier's cover. The humidistat reads the humidity of the incoming air and depending on the preset value does or does not dehumidify. This mechanical humidistat has a back-up function in case of digital humidistat or remote controller malfuntion or failure. Mechanical humidistat is set to 70%. User is advised not to change this settings.

The dehumidifier is being turned on and off by a digital humidistat with display. The built-in humidistat is located in the cover of the device. It reads the humidiy of the incoming air and depending on the preset value, initiates the dehumidification if needed. In indoor swimming pool halls, the optimal air humidity level should range between 55% and 65 %. Decreasing the level of humidity under the above mentioned range is not desirable, considerating the physiological aspects as well as the aspects of providing building protection. Moreover, it increases the consumption of electrical energy. The humidistat can be fully controlled by the user.

Humidistat display (front view)

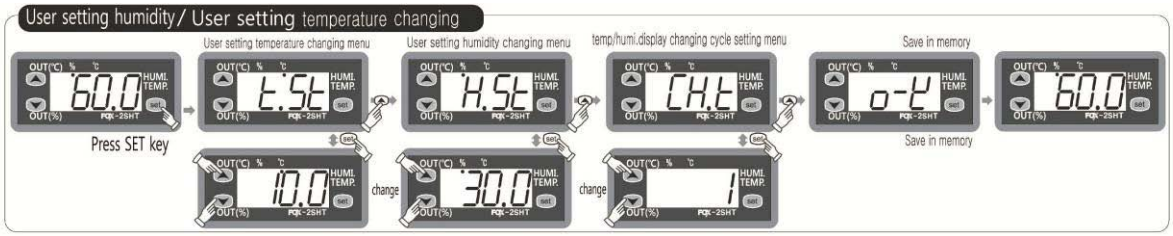

FAILURE REPORTING:

Er1 ***Memory failure. Switch off and then switch on again the electrical connection. If the failure reporting continues, please ask us to change the component.***

0-E ***Sensor failure. The electrical connection of the sensor is broken off. Please control the cable.***

S-E ***Sensor failure. The sensor is short-circuited. Please control the cable.***

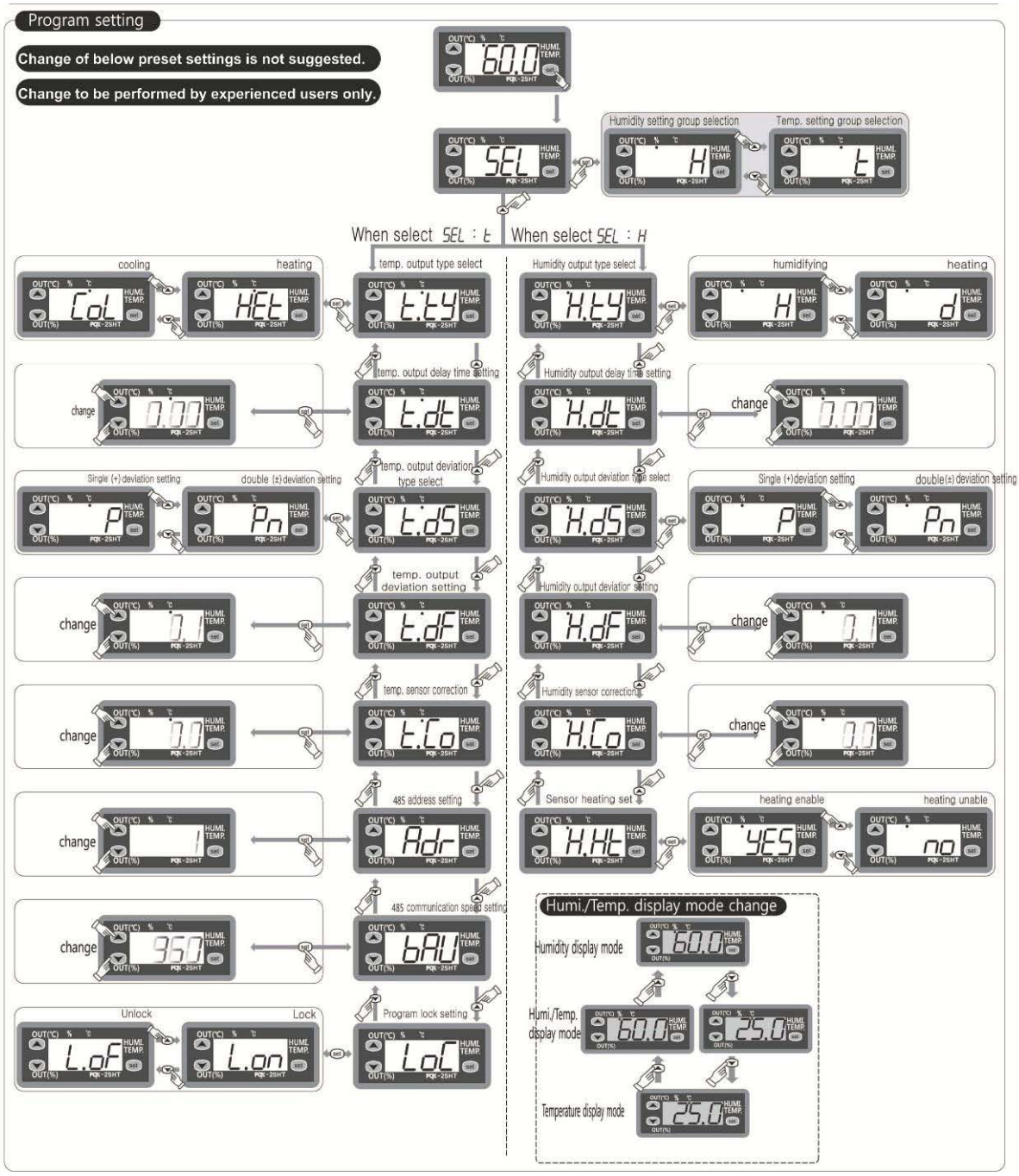

Built-in digital humidistat is located on the front side of the unit's cover. The unit is preset to keep the humidity at 55%. User can set the humidity to requested value between 10-100%. Appropriate relative humidity range in the swimming pool is between 55-65%. Lower humidity is not necessary; it has no effect on building material or fabric protection and if dropped below 35% may harm your mucous tissue. Higher relative humidity than 70% will result in building material or fabric damage and also creates bacteria and mould favorable environment.

4.2 Control of the fan

A fan is very important part of a dehumidifier. Microwell has programmed the fan functionality in order to ensure absolute humidity control in your pool with strong focus on energy efficiency. For this reason all ducted dehumidifier models's (DRY500DUCT, DRY800DUCT and DRY1200DUCT) fans work on high speed when dehumidification is activated (compressor on) and are turned off when the dehumidifier does not dehumidify (compressor off). In turn off stage, in order to ensure constant control of the pool environment, the fans are programmed to perform a 2 min humidity reading every 15 minutes. Should measured humidity be below requested level, the fans ‚go to sleep' for another 15min. Should the humidity measured be above the requested level, the fans will be turned on to high speed and the unit will initiate dehumidification.

Please check 6. TECHNICAL DATA (see Page 14) for fan air flow and external pressure. It is necessary to design the air ducting in compliance with these technical parameters. Proper air circulation is required to achieve proper humidity control in the swimming pool hall. It is advised to contact professional air ducting company to design and install the ducting system.

4.3 Compressor control

Start-up of the compressor is due to its protection delayed by 3 minutes. Depending on the humidity of the environment, it may take even longer for compressor to start operating. Once the compressor stops operating, the operation is renewed automatically at the earliest after three minutes. The user must not alter the preset delay-action relay.

After longer time without operations when compressor attempts to turn itself on, it is normal to take up to 4-6 turning-on attempts to finally turn the compressor on. This depends also on current air temperature. Lower temperature environment (app. 22°C) requires more attempts. Higher temperatures (30°C) less.

4.4 Maintenance

At least once a year it is necessary to have the unit checked and cleaned by a qualified service specialist. This will ensure long and reliable service life of the unit.

5. INSTALLATION GUIDE

The unit must be installed in compliance with the local installation and electrical installation regulations!

5.1 Location of the equipment

DRY 500 DUCT, DRY 800 DUCT and **DRY 1200 DUCT** are designed to be installed in technical rooms. All models are IP44 protected. For maintenance purposes it is essential to have min 200mm of a free space on both sides of the unit and min 750mm from the front side of the unit. In technical chamber or adjacent room it is necessary to have 2.25x1m^2 of a floor surface.

5.2 Mounting of the unit

DRY 500 DUCT comes by standard with wall console and it is designed to be installed on the wall.

DRY 800/1200 DUCT comes by standard with floor feet designed to be installed on the floor. Alternatively it is possible to install **DRY 800/1200 DUCT** on the wall using wall console.

Please note that the screws and dowels supplied with this dehumidifier are to be used only with solid concrete or brick wall. Please check your wall material and choose appropriate screw and dowel.

DRY 500 DUCT - Please use installation layout. It is 1:1 scale drawing of the dehumidifier with markings for wall console screws, side fixation screws, water drainage, electrical power supply and LPHW connection from the back.

Brief installation instructions:

DRY 500 DUCT

1. Confirm the position of the dehumidifier and the wall console screws using Installation layout.
2. Drill 3 holes, use appropriate dowels.
3. Fix the wall console tightly with appropriate screws. **Wall console must be perfectly levelled using spirit level!**
4. **Remove the transport protection of the compressor! More information below.**
5. Hang the dehumidifier onto the wall console.
6. Remove the right part of front cover (3 screws) and connect the electrical power supply.
7. Put the condensate water hose into drainage (from the back).
8. Turn the unit on and test it.
9. If unit works and appears to operate normally, turn it off and continue with installation finalization.
10. Set the ventilator mode (*4.2 Control of the fan*). Put the right side of the cover back and connect the air ducting from above and below using 4 screws each (screws are not supplied with the dehumidifier).

DRY 800/1200 DUCT

1. Confirm the position of a dehumidifier on floor feet / wall console.
2. In the case of wall console fit both consoles with 3 screws and dowels. Both consoles must be levelled by spirit level. Screws are supplied with the dehumidifier.
3. **Remove the transport protection of the compressor! More information below.**
4. Level the dehumidifier using flexible feet / fix the dehumidifier on the wall console with screws (all coming in packaging).
5. Remove the left part of front cover (2 screws) and connect the electrical power supply.
6. Put the condensate water hose into drainage (from the back).
7. Turn the unit on and test it.
8. If unit works and appears to operate normally, turn it off and continue with installation finalization.
9. Put the right side of the cover back and connect the ducting with 4 screws.

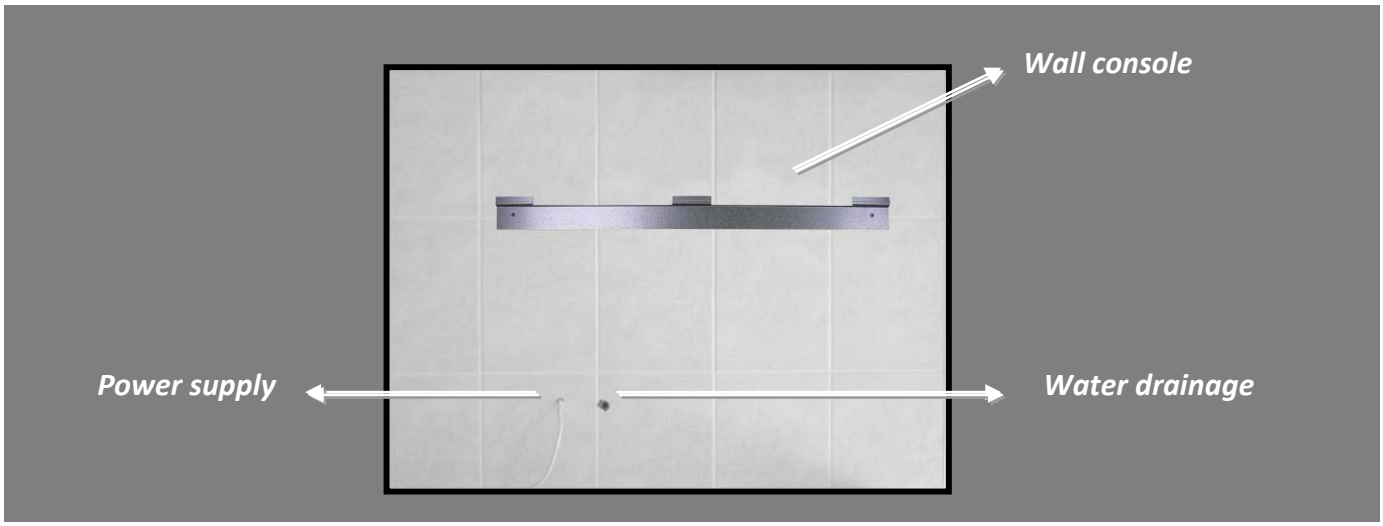

Picture: Preparation of wall installation for DRY500DUCT

5.3 Compressor transport protection

Your compressor is protected for the transport with plastic zipper strap. Due to compressor size and weight this is necessary in order to have a fully functional unit delivered to you safely. This protection **must** be removed before starting the unit. Please view below pictures on how to proceed. The procedure generally takes few seconds. Please be advised that no removal of plastic zipper strap results in warranty void.

Picture 1: Plastic zipper strap as delivered from factory.

Picture 2: To cut the strap use pliers or other appropriate tool.

Picture 3: Finally remove the strap from the the dehumidifier.

5.4 Drainage of condensate water

Condensed water is drained from the unit by the force of gravity (downwards). Unit's condensate tray is levelled to have sufficient declivity when the dehumidifier is perfectly levelled (using spirit level). The condensation water must be drained through **a siphon** into a sewer or into the outside environment. Please do not place the drainage hose upwards (against gravity), this will lead in unit's inability to drain the condensate water. This will subsequently cause water leakage from underneath the unit's cover and may lead to unit's malfunction, damage or failure. Also it may cause the underlying floor be wet, which creates danger of accident and harm to health resulting from unwanted slip. Manufacturer, distributor or reseller are not responsible for such damages.

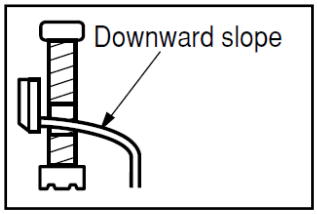

Correct drain hose Installation.

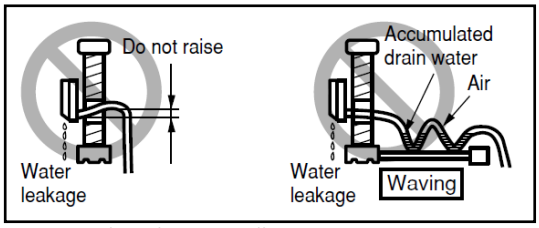

Incorrect drain hose installation.

5.5 Connection of power supply

Connection of the unit onto the mains must conform to relevant safety standards. Connection requirements: Power supply: 220-240V / 50Hz. Protection: 16A (DRY 500/800DUCT) or 20A (DRY1200DUCT) by a protective switch (RCD) with nominal differential drop-out current not exceeding 30 mA. The main switch of the unit must be situated outside of the swimming pool hall. The main switch of the unit must be bipolar, with switch-out breaking of conductors L and N. An appliance for disconnecting the unit from the mains must be embedded into a firm surface. The distance of contacts, when switched off, must be at least 3 mm for all poles.

The connection of the appliance to the electric mains must be carried out by a certified electrician.

Please mind all electrical safety precautions from page # 3

Terminal board for connection onto the electric mains.

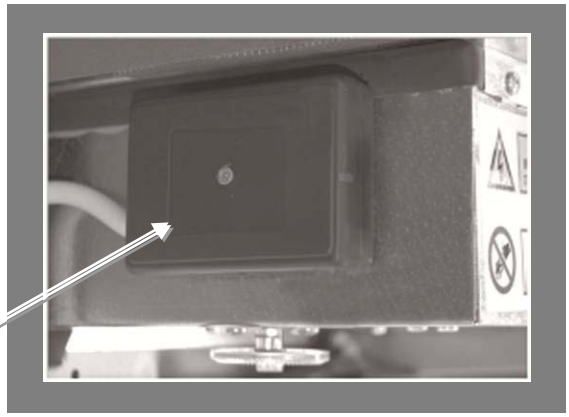

5.6 LPHW heating coil for additional heating – on demand

The LPHW heater element is supplied on demand only. Connection of the LPHW onto the LPHW plumbing is carried out similarly to the installation of radiators. On the feeder pipe, it is connected by a control valve and on the return pipe by a closing screw joint. The LPHW is not supplied with a control valve and a screw joint; these are supplied by the supplier of the heating.

Please note that DRY 500/800/1200 DUCT are in standard version equipped with thermostat and no-current contact for heating.

The dehumidifier can be equipped with Solenoid valve on demand. In combined use together with LPHW, the dehumidifier has the functionality of individual heating appliance (fan coil), i.e. fan works independently with the compressor (humidistat) and independently with LPHW (thermostat).

If you chose LPHW with your dehumidifier without built-in digital humidistat & thermostat and without remote wireless humidistat & thermostat, there is a risk of dehumidifier overheating. Overheating may occur if hot water flows into LPHW also in the time when the dehumidifier does not dehumidify (fan off). Normally, with built-in or remote humidistat & thermostat and original solenoid valve, the dehumidifier controls the hot water inflow automatically thus effectively avoids overheating damage. Without original thermostat and/or solenoid valve it is necessary to ensure proper and effective regulation of hot water inflow. Manufacturer, distributor or reseller do not bear responsibility for damage resulting from not following above instructions.

LPHW connection options (from the back or from right) are described in section 7.3. Unit's dimensions.

DRY 500 LPHW nominal heating outputs

	Heating output: /W/
90/70/30 °C	4000
80/60/30 °C	3032
70/50/30 °C	2010
55/45/30 °C	1320
45/35/30 °C	528

DRY 800/1200 LPHW nominal heating outputs

	Heating output: /W/
90/70/30 °C	6000
80/60/30 °C	4545
70/50/30 °C	3156
55/45/30 °C	1980
45/35/30 °C	792

After installing the LPHW plumbing and leading the LPHW into the element under pressure, it is necessary to bleed the heater element. The bleeding valve is located on the feeder pipe of the LPHW heater element.

If Solenoid valve was supplied originally with the unit, please make sure it is properly connected to water circuit. Otherwise the unit may suffer from overheating resulting malfunction or damage.

It is highly advised to insert manual valves into water piping in between the LPHW and water piping leading to a heat source /e.g. gas boiler/. This will allow easy and quick dehumidifier disconnection from heating system.

5.7 Hot gas defrost (DRY500DUCT) – on demand

Hot gas defrost allows the dehumidifier to operate effectively at air temperatures down to 5°C. It is designed for heavy duty low air temperature operations. Although the efficiency of the device concerning the extraction rate versus energy consumption by 5°C ambient air temperature conditions is low, the dehumidifier will still operate normally. If your dehumidifier is equipped with hot gas defrost accessory, then the gas circuit is equipped with 4-way valve. When temperature on evaporator drops below zero, system starts to count 30 minutes of a time. After this period, the evaporator temperature is checked again and if the current temperature is still below zero, the compressor and the ventilator are turned off. Dehumidification stops. Gas circuit is reversed and after 3 min the compressor starts. System now defreezes the unit for 3 minutes. After another 3 minutes, if the defrost cycle is completed, the unit goes into usual operations. In extremely low temperatures and in still humid enough air it is normal to take 2 or 3 defreezing cycles to complete the procedure.

6. TECHNICAL DATA

6.1 Technical data table *

DATA	UNIT	DRY 500 DUCT	DRY 800 DUCT	DRY 1200 DUCT
For swimming pools with max. water surface	m2	50	80	110
Exctraction rate at 30°C and 60 % RH	l/24hrs	52	88	112
Exctraction rate at 30°C and 70 % RH	l/24hrs	60	115	140
Exctraction rate at 30°C and 80 % RH	l/24hrs	68	135	170
Operational temperature - standard	°C	22-35	22-35	22-35
Operational temperature - antifreeze stat	°C	15-35	15-35	15-35
Operational temperature - Thermostatic expansive valve (TEV)	°C	22-42	-	-
Operational temperature - antifreeze stat + TEV	°C	15-42	-	-
Operational temperature - hot gas defrost	°C	5-35	-	-
Operational humidity range	% RH	20-100	20-100	20-100
Air flow	m3/h	800-1200	1200	1400
EXTERNAL PRESSURE	Pa	300-200	200	190
Noise level (in 1m distance)	dB (A)	56/58	58	60
Heat output	W	3500	5100	5250
Energy consumption	W	1150-1500	1700	2250
Voltage	V/Hz/f	230/50/1	230/50/1	230/50/1
Operating / Starting current	A	6.5 / 30	7.6/50	10/50
Protection	A	16	16	20
Conductor	mm2	CYSY 3C x 2,5	CYSY 3C x 2,5	CYSY 3C x 2,5
Condensed water pipe	mm	d 18	d 18	d 18
Dimensions netto (width x height x depth)	mm	1245 x 660 x 253	1247 x 950 x 300	1247 x 950 x 300
Dimensions brutto (width x height x depth)	mm	1315 x 735 x 345	1300 x 1020 x 370	1300 x 1020 x 370
Weight netto / brutto	kg	75 / 88 kg	102/135 kg	103/136 kg
Amount of refrigerant - R 410 A	kg	0,75	1,6	1,9
Max. pressures in the system HP/LP	bar	28,5/8,5	35/12	35/12

** Manufacturer reserves the right to change above data without notice.*

Gas circuit is filled with refrigerant R410A which is two-content refrigerant (R32/R125). Based on ES No. 842/2006 are these contents considered to be a fluorcarbon greenhouse gases. The unit contains fluorcarbo greenhouse gases included in Kyoto Protocol:

R410A with global warming potential (GWP) 1720:
(R-32/125 50/50)
CH F +CF CHF
750 g (DRY 500 DUCT)
1600g (DRY800 DUCT)
1900g (DRY1200 DUCT)

This information is informatory, for exact amount of refrigerant in your device, please turn to serial number sticker (located in the upper right corner of the unit from the back).

6.2 Extraction rate diagrams

DRY 500 DUCT

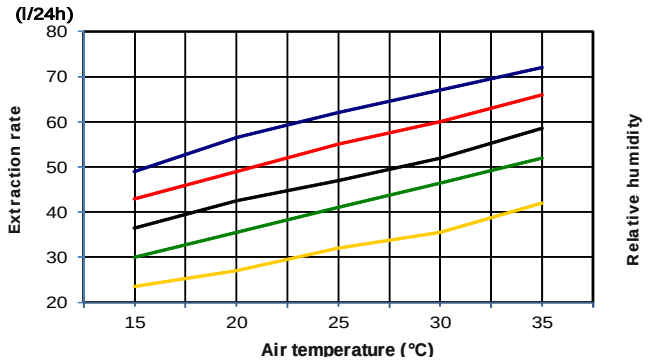

DRY 800 DUCT

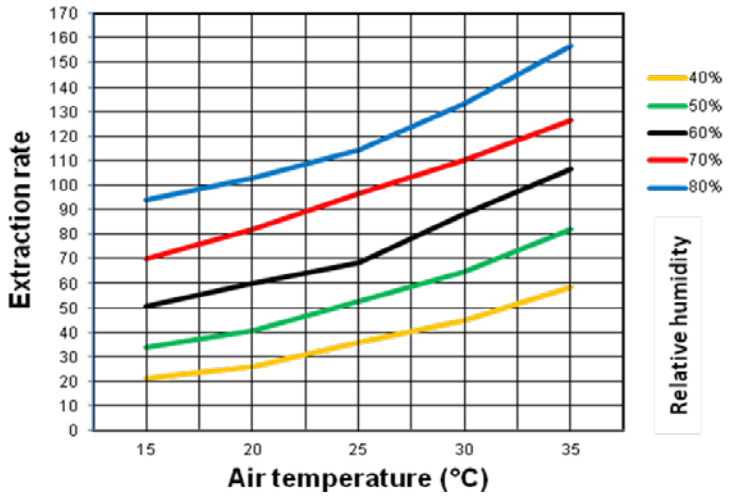

DRY 1200 DUCT

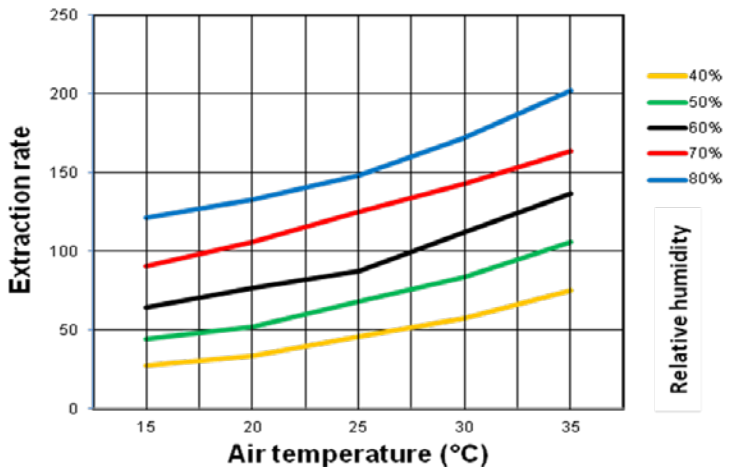

6.3 Unit´s dimensions

DRY 500 DUCT

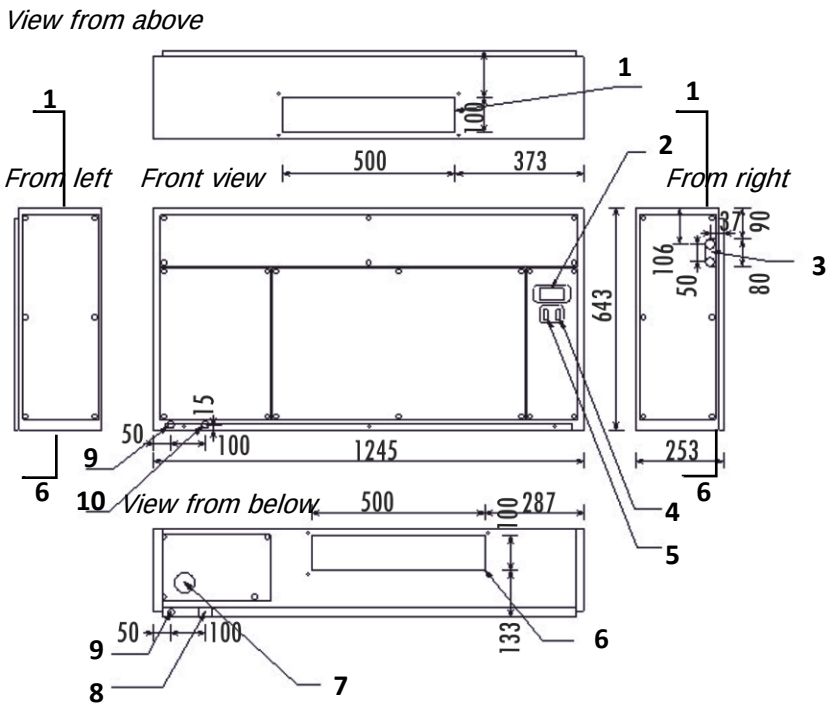

LEGEND:

1 - DRY AIR OUTLET
2 - DIGITAL HUMIDITY REGULATOR
3 - LPHW CONNECTOR – ON DEMAND
4 - VENTILATOR SWITCH
5 - MAIN SWITCH
6 - HUMID AIR INLET
7 - AUXILIARY MECHANICAL HUMIDISTAT
8 - CONDENSATE DRAIN FROM THE BOTTOM
9 - ELECTRICITY CONNECTION
10 - CONDENSATE DRAIN FROM BEHIND

DRY 800/1200 DUCT

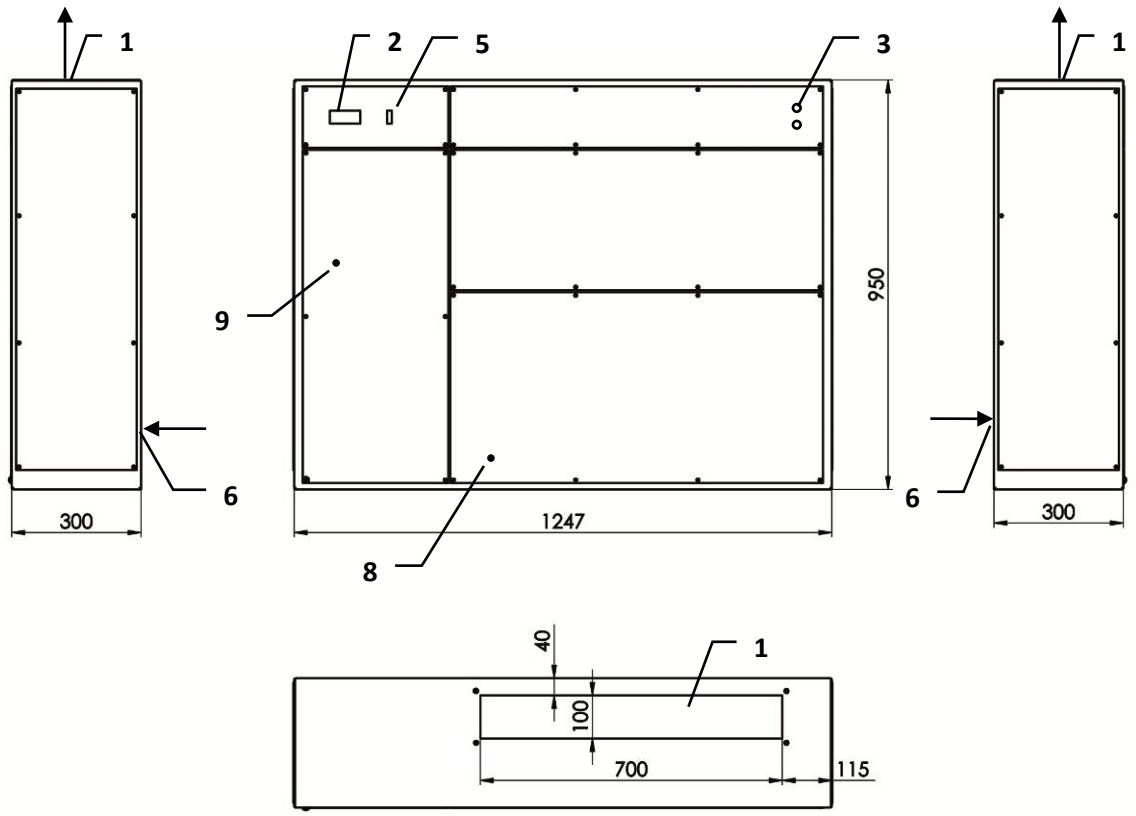

6.4 Wiring diagrams

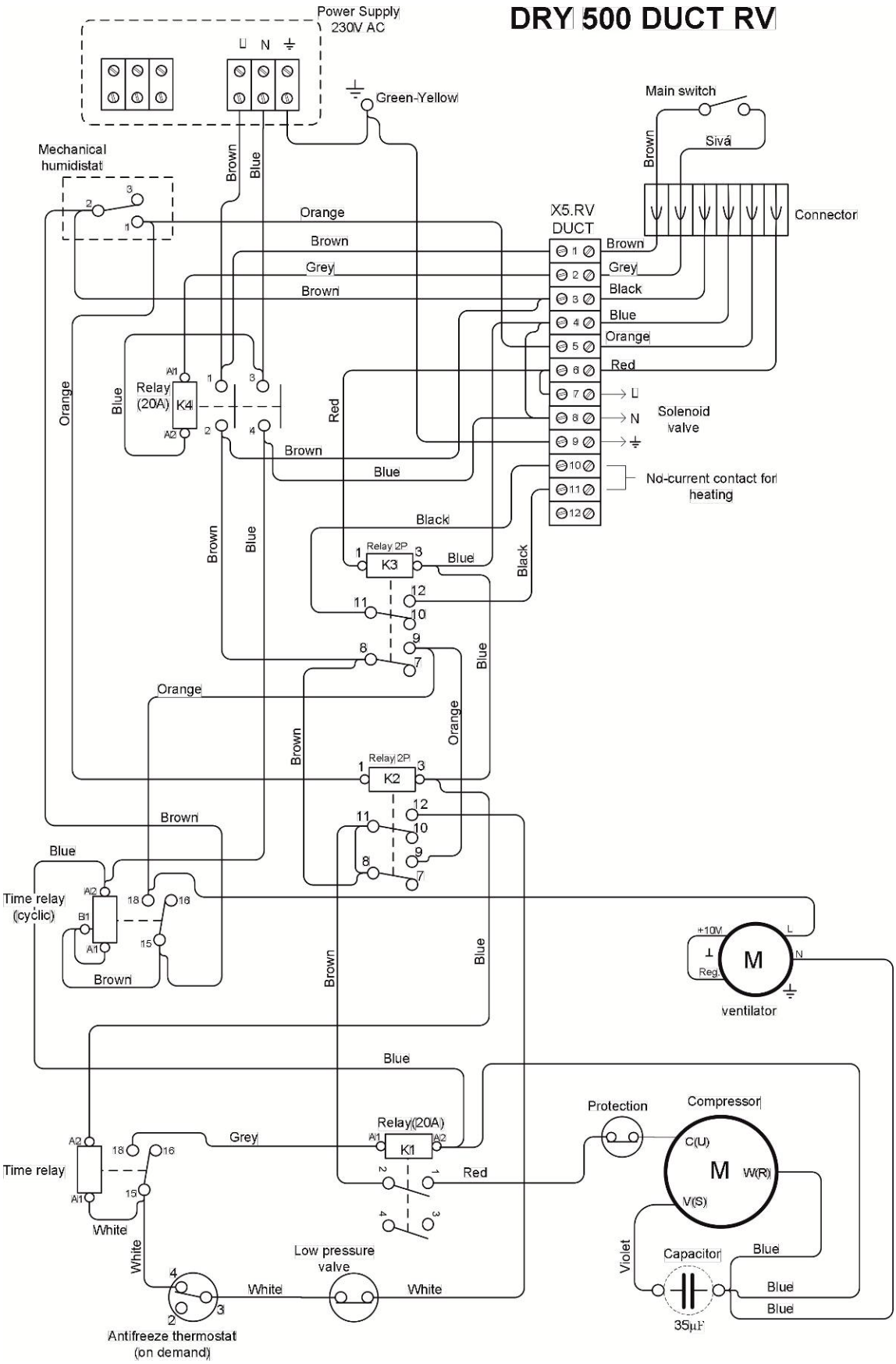

DRY 500 DUCT RV – TERMINAL CONNECTION X5.RV DUCT DSFOX, NO CURRENT CONTACT

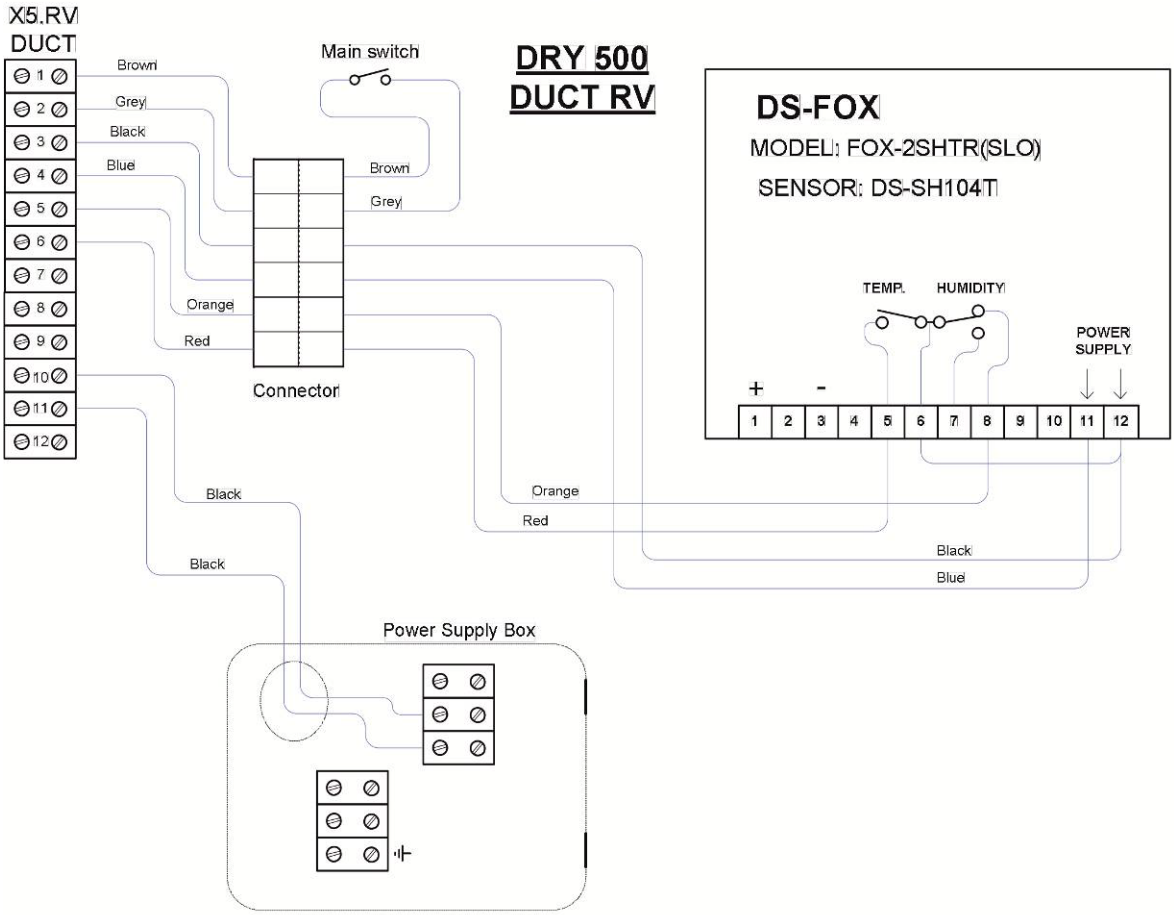

DRY 500 DUCT RV - TERMINAL CONNECTION X5.RV DUCT EXTERNAL THERMOSTAT, SOLENOID VALVE

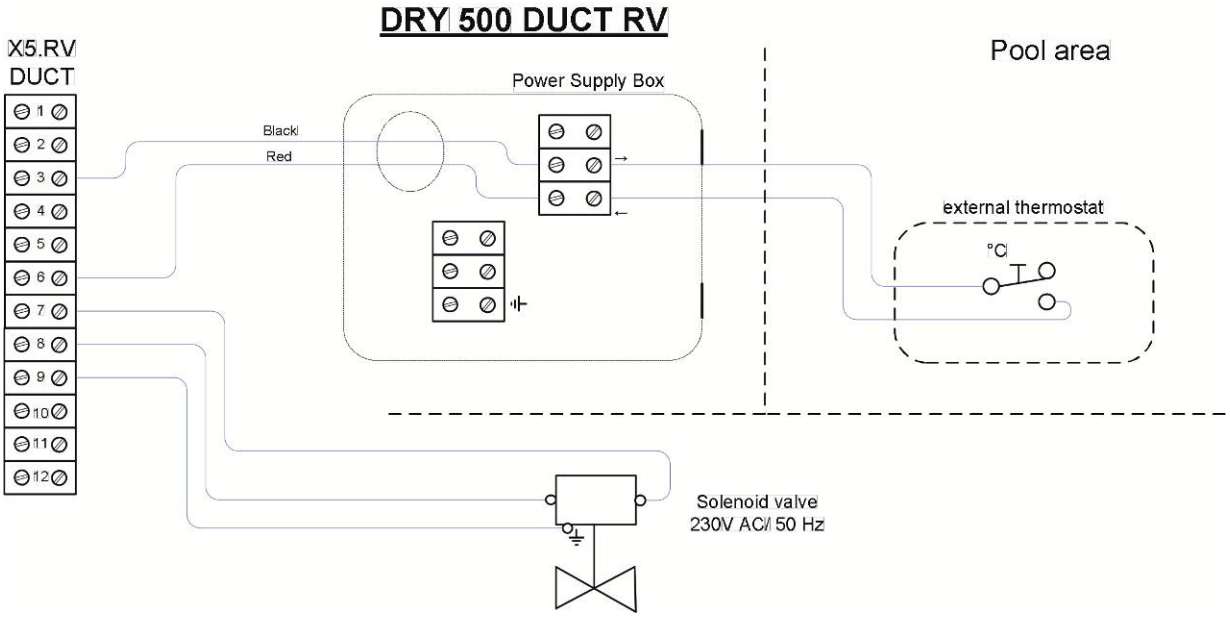

DRY 500 DUCT RV - X5.RV DUCT, EASY 300, NO CURRENT CONTACT FOR HEATING, SOLENOID VALVE

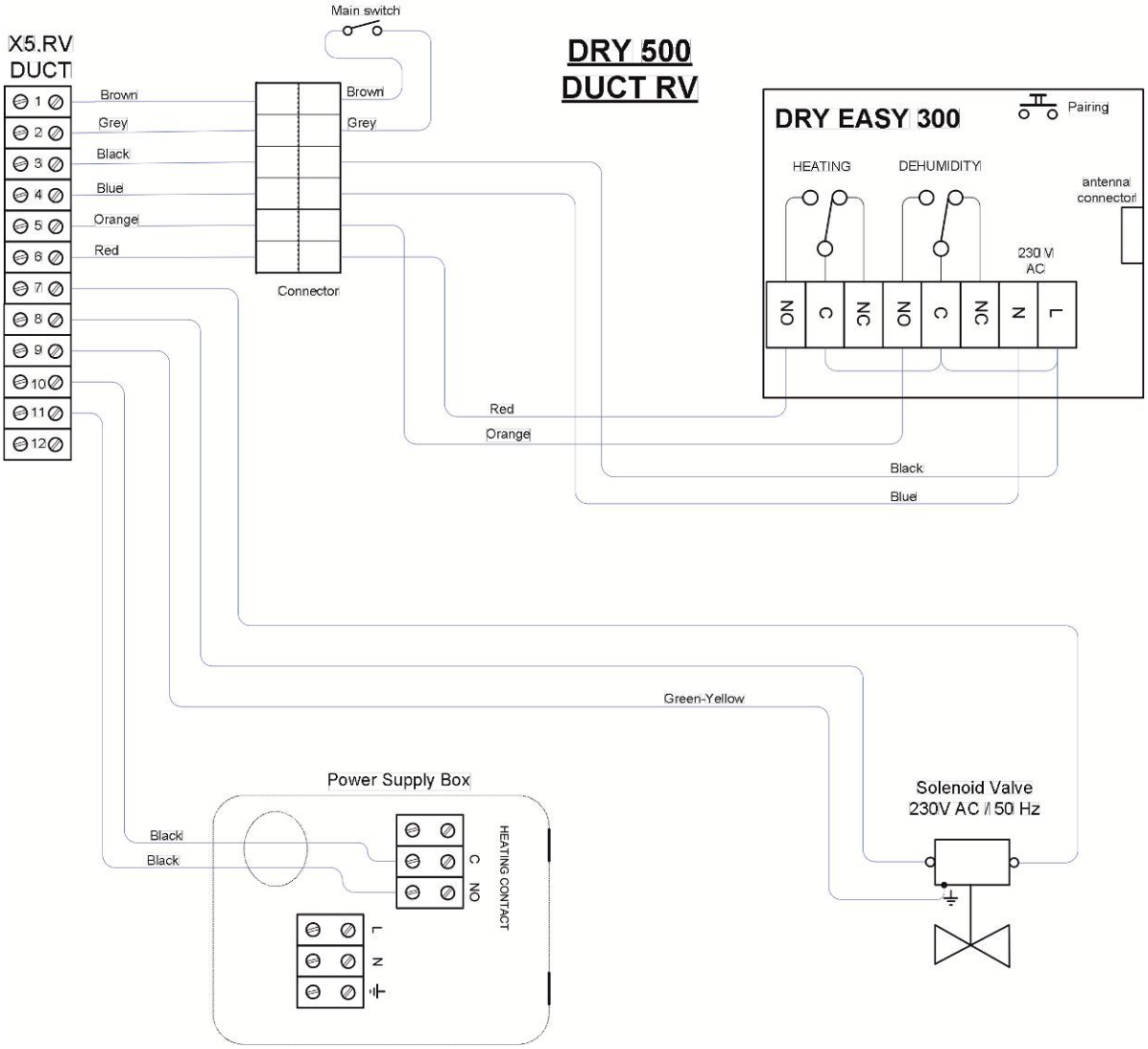

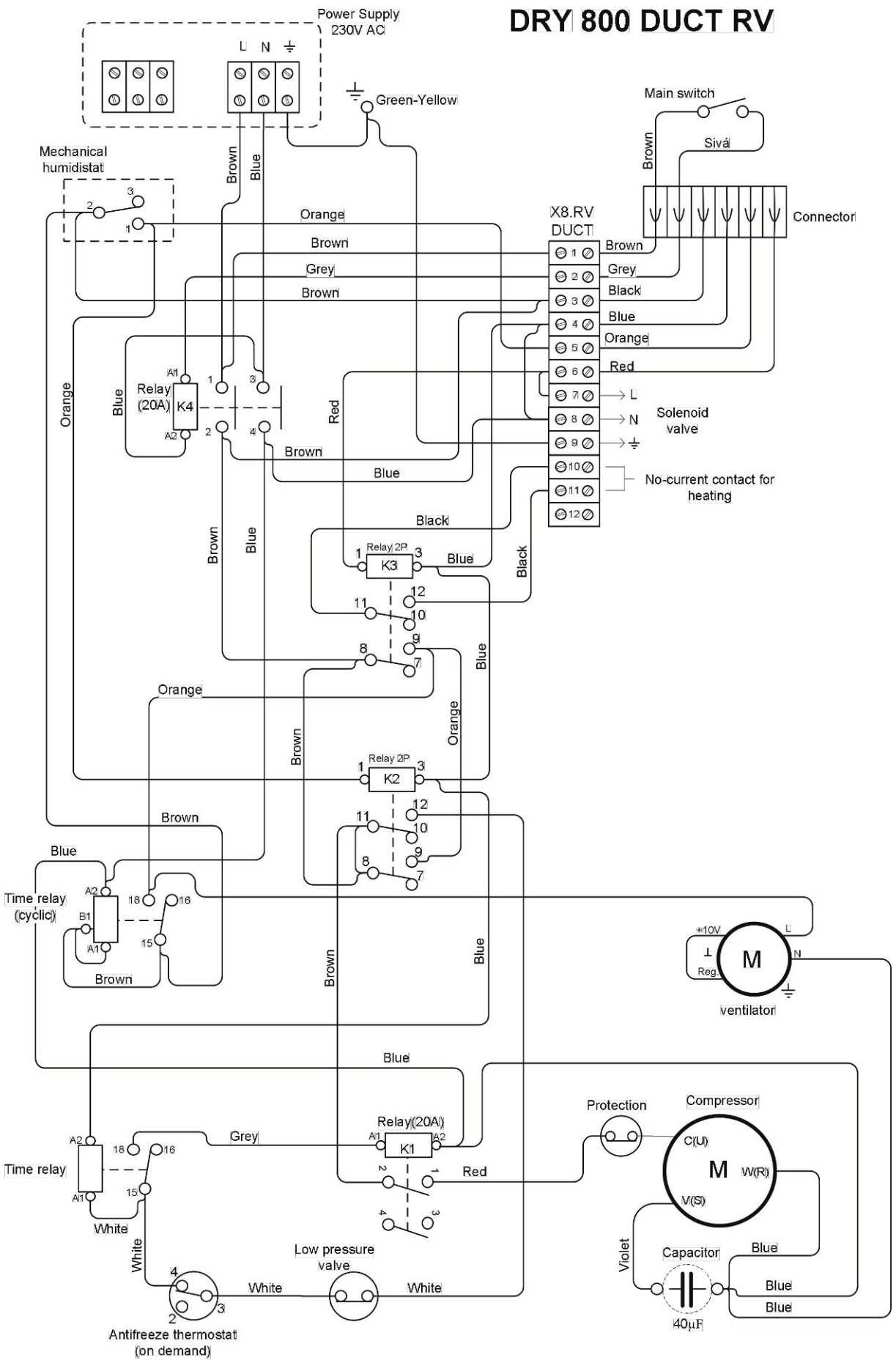
DRY 800 DUCT RV
Power Supply
230V AC
L N
Green-Yellow
Main switch
Sivá
Brown
Connector
Mechanical
humidistat
Brown
Blue
Orange
Brown
Grey
Brown
X8.RV
DUCT
Brown
Grey
Black
Blue
Orange
Red
L
N
Solenoid
valve
No-current contact for
heating
Relay
(20A)
K4
A1
A2
Orange
Blue
Red
Brown
Blue
Black
Relay 2P
K3
Blue
Black
Brown
Blue
Orange
Orange
Brown
Relay 2P
K2
Brown
Blue
Time relay
(cyclic)
A2
B1
A1
18
16
15
Brown
Brown
Blue
+10V
Reg.
M
L
N
ventilator
Blue
Protection
Compressor
Relay(20A)
K1
A1
A2
Grey
Red
Time relay
A2
A1
18
16
15
White
White
C(U)
M
W(R)
V(S)
Violet
Capacitor
Blue
Blue
Blue
40µF
Low pressure
valve
White
White
Antifreeze thermostat
(on demand)

DRY 800 DUCT RV – TERMINAL CONNECTION X8.RV DUCT DSFOX, NO CURRENT CONTACT

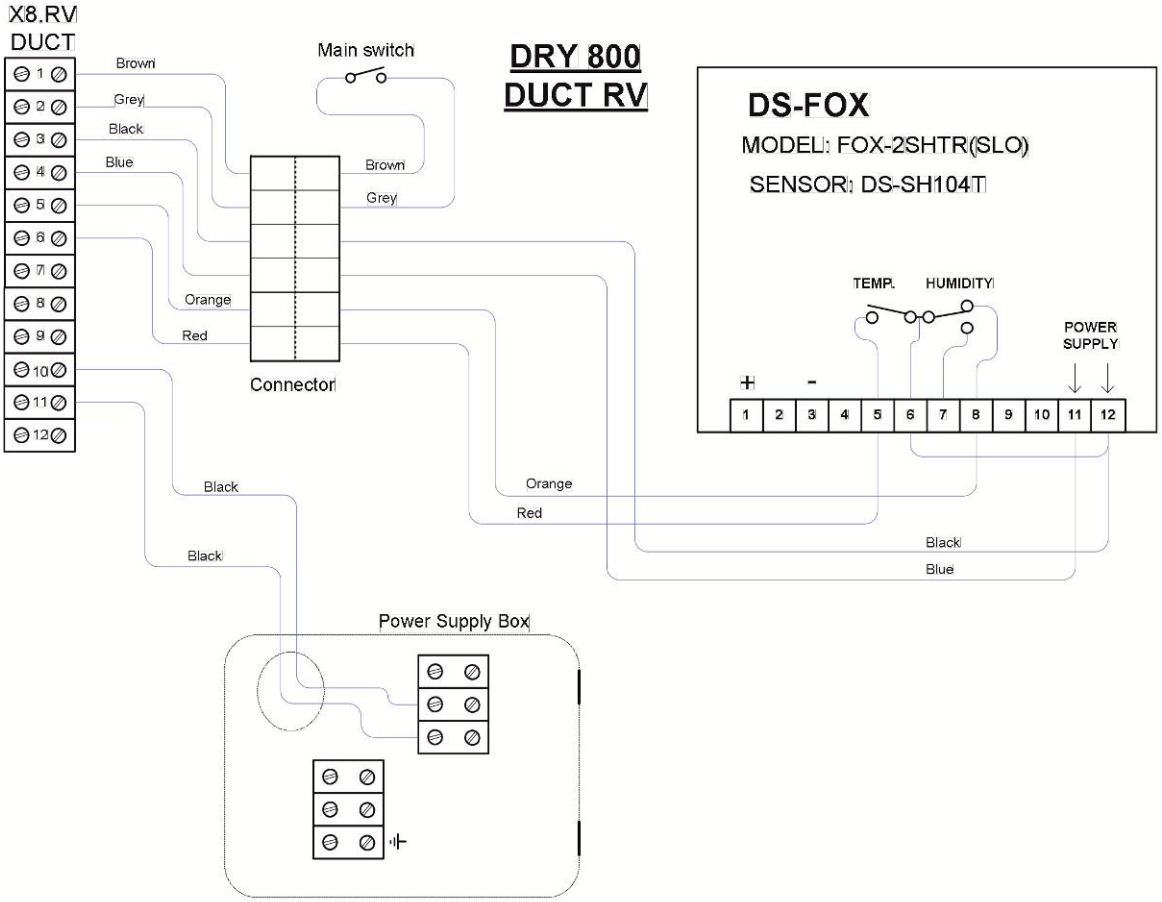

DRY 800 DUCT RV - TERMINAL CONNECTION X8.RV DUCT EXTERNAL THERMOSTAT, SOLENOID VALVE

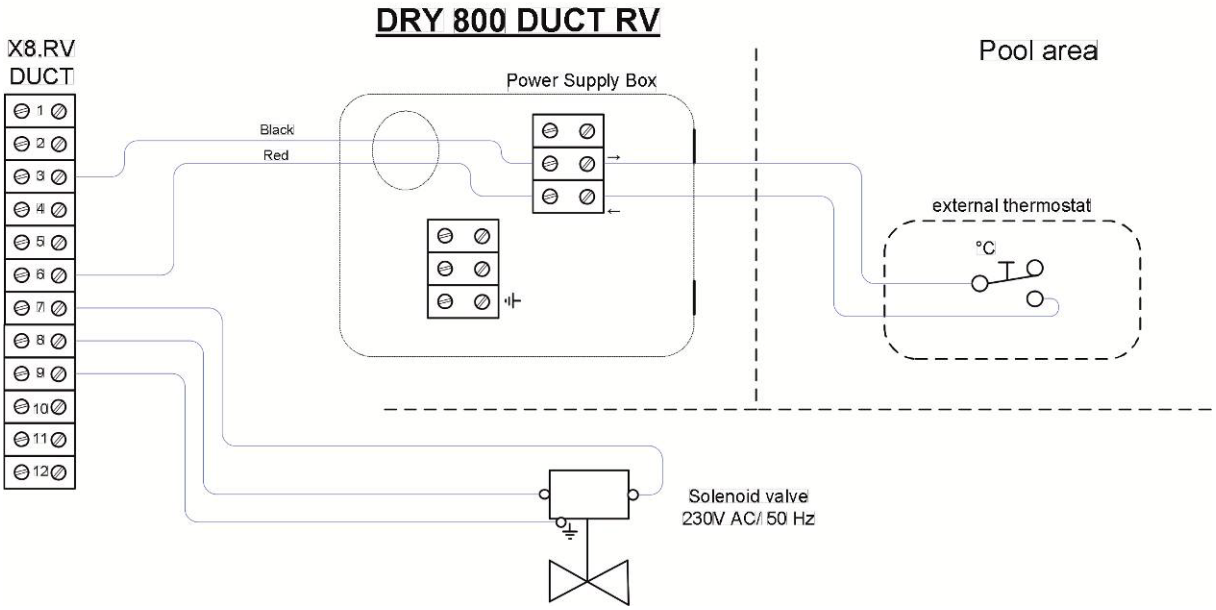

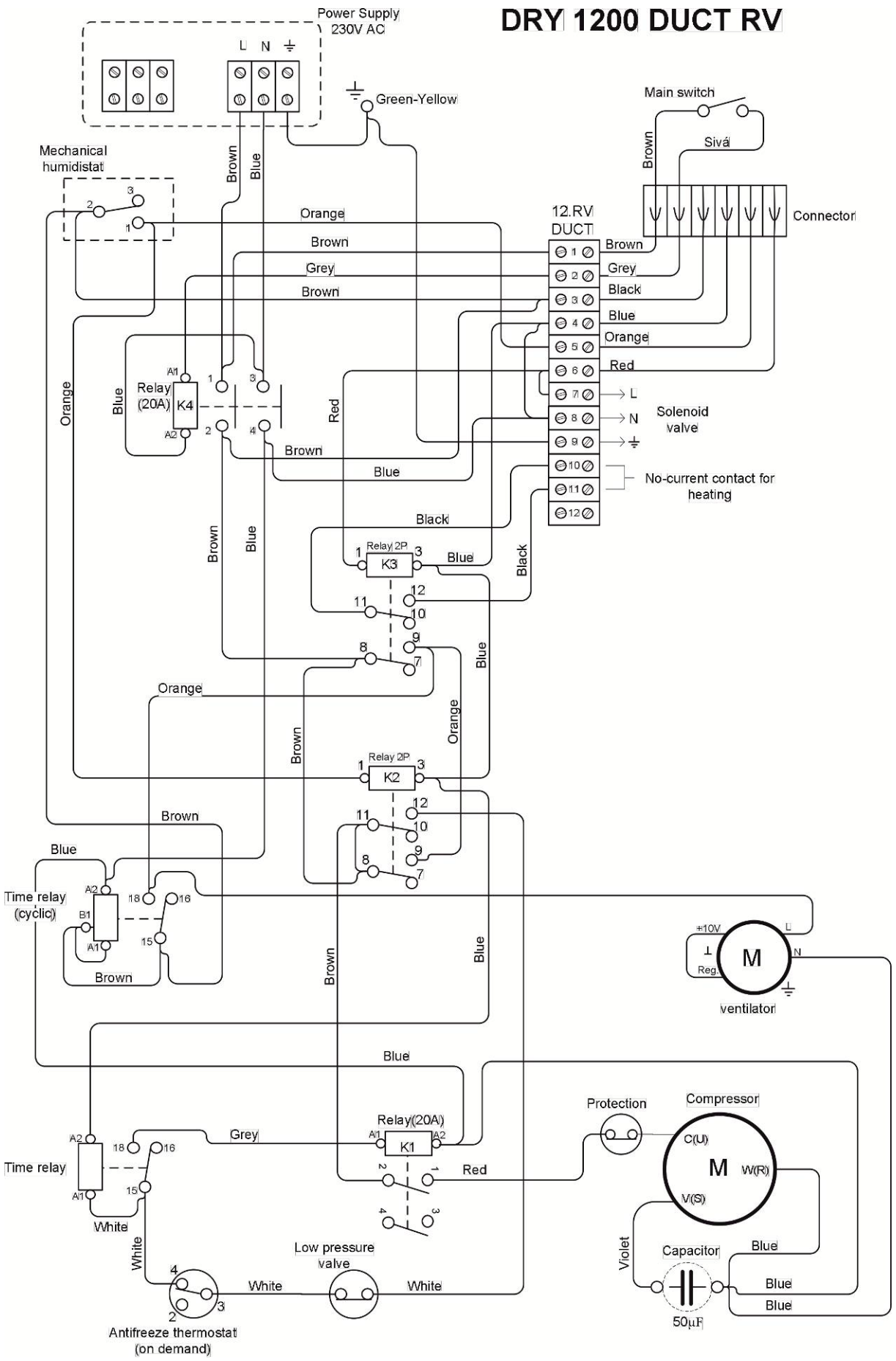
DRY 1200 DUCT RV
Power Supply
230V AC
L N
Green-Yellow
Main switch
Sivá
Brown
Connector
Mechanical
humidistat
Brown
Blue
Orange
Brown
Grey
Brown
12.RV
DUCT
Brown
Grey
Black
Blue
Orange
Red
L
N
Solenoid
valve
No-current contact for
heating
Relay
(20A)
K4
A1
A2
Orange
Blue
Red
Brown
Blue
Black
Relay 2P
K3
Black
Brown
Blue
Orange
Relay 2P
K2
Brown
Blue
Time relay
(cyclic)
A2
B1
A1
18
16
15
Brown
+10V
Reg.
M
L
N
ventilator
Blue
Protection
Compressor
Relay(20A)
K1
A1
A2
Grey
Red
Time relay
A2
A1
18
16
15
White
White
Low pressure
valve
White
White
Violet
Capacitor
Blue
Blue
Blue
50µF
Antifreeze thermostat
(on demand)

DRY 1200 DUCT RV – TERMINAL CONNECTION X12.RV DUCT DSFOX, NO CURRENT CONTACT

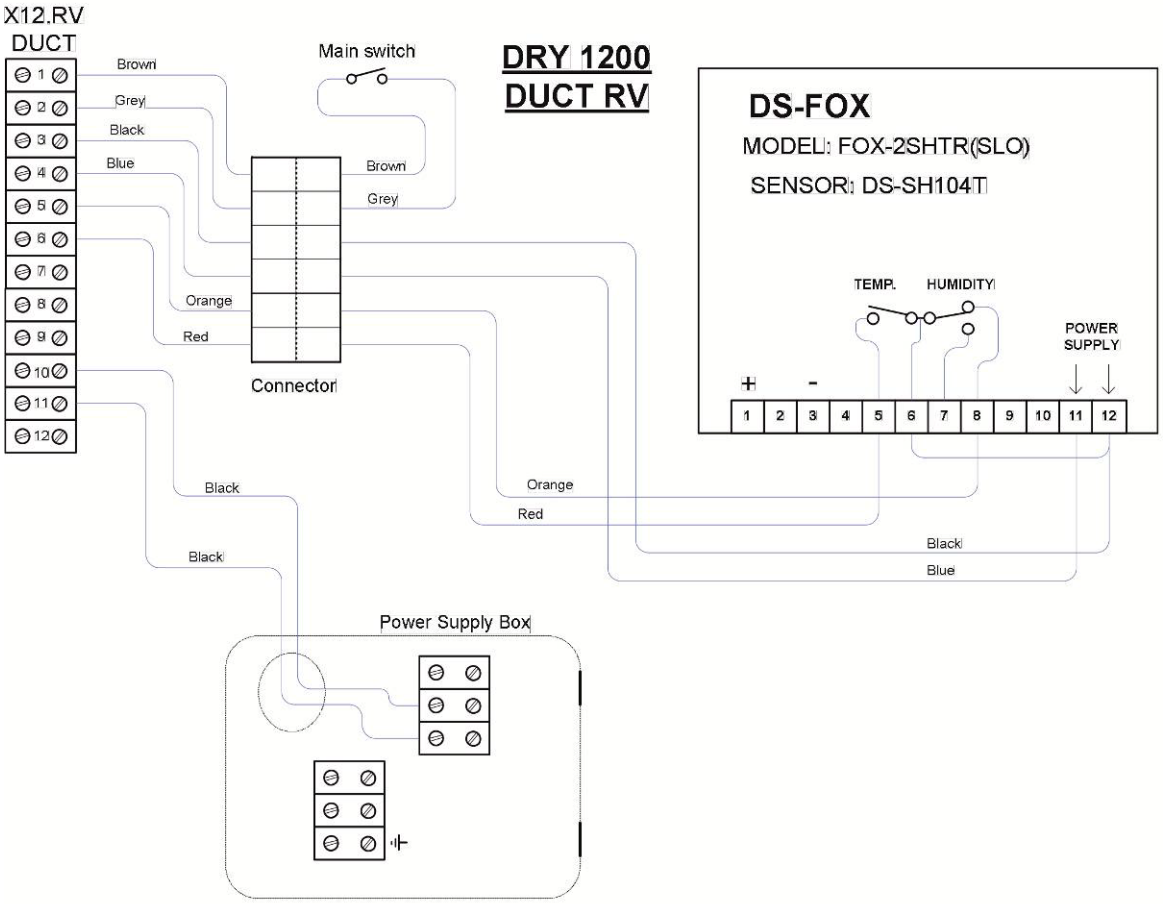

DRY 1200 DUCT RV - TERMINAL CONNECTION X12.RV DUCT EXTERNAL THERMOSTAT, SOLENOID VALVE

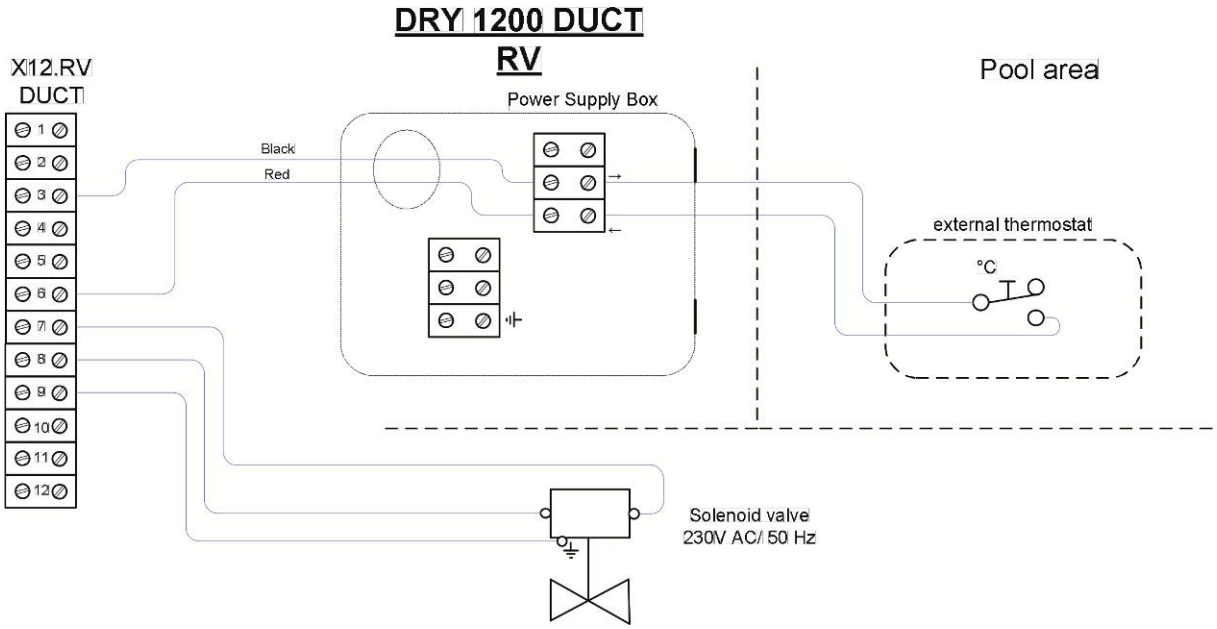

DRY 1200 DUCT RV - X12.RV DUCT, EASY 300, NO CURRENT CONTACT FOR HEATING, SOLENOID VALVE

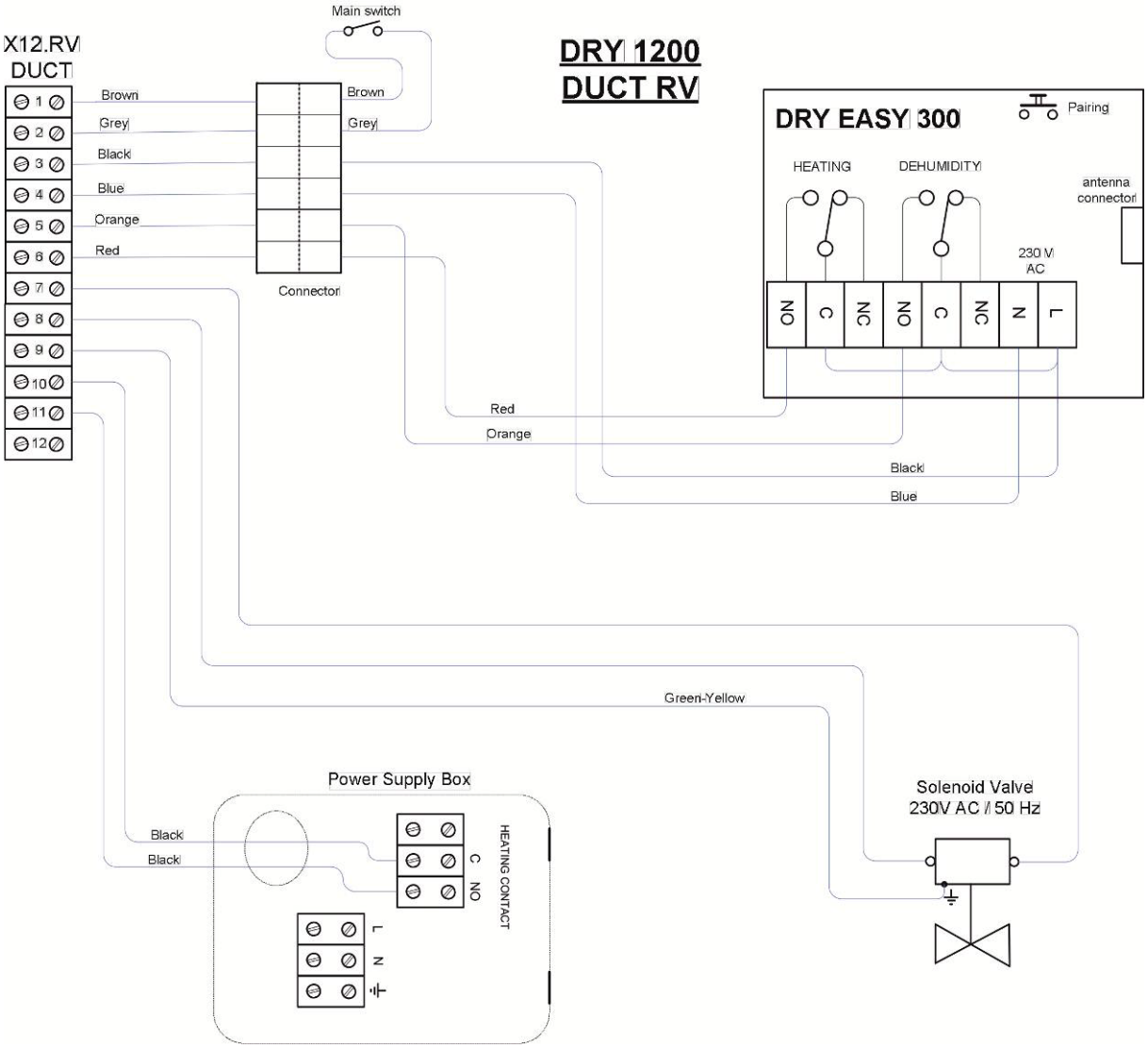

7. SUMMER SHUT-DOWN

Some swimming pool users use to shut the dehumidifier for summer down. This is mainly due to favourable weather conditions with dry and warm weather. In such case, good air ventilation / natural air exchange does the job of humidity control for few weeks/months of the year. Although following rapid change in weather (e.g. into rainy days) may result in high humidity in your pool.

In this case please make sure that:

1. Dehumidifier's circuit breaker is off (i.e. dehumidifier does not have any power supply)
2. Dehumidifier is cleaned of duct, fluff or other dirt that may harden / stiffen its structure during the shut down period making it hard to remove afterwards.
3. Make sure air inlet and outlet are covered properly so no chlorine or other chemicals are not input into dehumidifier body, especially ventilator bearings. Failing to do so may result in bearings corrosion and failure of the dehumidifier.
4. **Manufacturer does not suggest any planned shut down of the system because during shut down period the humidity is not controlled effectively and automatically.**

8. WARRANTY

This dehumidifier is subject to a warranty period of 2 years. It may have been prolonged in your country or by your distributor or reseller. Please contact your reseller or distributor in the case a warranty should be claimed for this dehumidifier.

Please note that no claims will be accepted (warranty void) if:

1. The dehumidifier has been used in an incorrect way, not as described in this manual or in contrary to this User's manual or against Safety measures of this User's manual.
2. The dehumidifier is installed in an incorrect way, not as described in this User's manual or in contrary to this User's manual.
3. The dehumidifier was put to operation by an unauthorized person.
4. The air flow through the dehumidifier is out of the defined borders.
5. The unit has been exposed to a mechanical damage / force or any unauthorized action was performed on construction of a unit - welding, brazing or has been mechanically damaged resulting in scratches, blends, compressions, pipe rupture, etc. No mechanical damage is accepted as warranty claim unless a written claim had been made with transporting agent delivering the device.
6. Chemical conditions in the pool or pool hall have not been within the defined borders (*please see below table Allowed chemical conditions*).
7. The dehumidifier suffered frost or overheating damage resulting from ambient air temperatures out of Temperature operational range.
8. The electric tension source is insufficient or improper in any other way.

When applying for warranty, please contact your distributor and indicate dehumidifier model, serial number and date of purchase. Please describe the genesis of the failure.

Acidity / pH level:	pH	7,4 +/- 0,4
Total alkalinity, as CaCO3	ppm	80-120
Total hardness, as CaCo3	ppm	100-300
Total melted dry mass	ppm	max. 3000
Maximal saline content	wt/wt	6%
Free chlorine range	ppm	1,0-3,0
Superchlorination	ppm	max. 30 ppm/max. 24 hours
Bromine	ppm	2-3
Baquacil	ppm	25-50
Ozone	ppm	0,8-1,0
Maximum copper content	ppm	max. 2
Aquamatic single purifier	ppm	max. 2
Tarn clean purifier	ppm	max. 2
Sherwood purifier	ppm	max. 2

Table: Allowed chemical conditions

TRANSPORT INSTRUCTIONS

The dehumidifier must be transported in the original packaging only and in a vertical upright position. Make sure that the dehumidifier cannot turn over or fall down during transport. Never put the dehumidifier aside! It may lead to serious compressor damage!
No mechanical damage is accepted as warranty claim unless a written claim had been made with transporting agent delivering the device. When receiving the product please check whether the package is not damaged. Please make a proper documentation of any damage immediately after delivery and claim all transport damage in written form with the forwarding agent at the delivery.

Manufacturer:
MICROWELL, spol. s r.o.
SNP 2018/42, 927 01 Šaľa, Slovakia
tel.: +421/31/702 0540
fax: +421/31/702 0542
e-mail: microwell@microwell.sk
w w w . m i c r o w e l l . e u

M a d e i n E U

Distributed by: